CG A8 Series Temperature Controller

Operation Instruction

Thank you for using CG A8 series temperature controller.
This instruction describes product function, features and proper usage
Before using, please pay special attention to issues below:

- User should master enough electric knowledge
- User must read and understand this instruction well for right usage
- Please consider applicability to system, machine and equipment
- Please note and observe the prohibition of this product
- The examples in this instruction or other data are only for user reference. No guarantee of a certain action.
- When using this controller with other products, please confirm whether it is in conformity with the relevant specifications, principles, etc..

Yueqing XIQI Electrical Technology Co.,Ltd

Address: Fenghuang Industrial Zone,Yueqing City,Zhejiang Province
TELL:+8613373852285 WEB:http://www.cnchog.com/
E-MAIL: Jeffery@cnchog.com WECHAT&Whatsapp：13373852285

A1 Content Index

A1	Content Index	C1	ALM alarm type define
A2	Warning	C2	ALM alarm parameter define
	Notes	C3	Input type selection
A3	Electric Specificaiton	C4	PID control type selection
A4	Model selection	C5	Status information explanation
A5	Outer dimension	C6	Error display explation
	Installation size	C7	Choose SV operating mode
A6	A8-1 wiring	D1	Analog type define
B1	A8-4/A8-7/A8-9 wiring	D2	Other information
B2	Panel funciton explanation	D3	Operation instruction
B3	Menu display explanation		

A2

Warning

① To avoid electric shock, DON'T touch the AC power supply terminals after power on
② Before power on, please confirm voltage conformity in range of AC 85~265V, to avoid damage to controller
③ Never remove, retrofit or repair the product or contact any internal components
④ If the output relay exceeds its life span, the contacts may melt and burn.
⑤ Tighten screw with 0.74-0.90Nm torque, as loose screws may cause fire
⑥ Use appropriate fuse to ensure power supply line and input / output line to prevent current impact
⑦ Don't use the controller in occasion of flammable, explosive gas, discharge of steam

Note

① For heat radiation, leave space around the controller and do not jam the ventilation holes in the controller.
② Keep enough space between the controller and equipment which generates high frequency and surge
③ Connect wires correctly
④ Use the controller under rated load and power supply
⑤ Use standard grade of alcohol to clean the controller; don't use paint thinner or similar chemicals
⑥ Read and understand this instruction carefully before using the controller
⑦ Don't use the controller in case the front panel peels off or breaks

A3 Electric Specificaiton

rated voltage	85-265VAC 50Hz
power comsumption	≤5VA
working environment	Ambient temperature: 0C ~50C Relative humidity: 35%~85% (no condensation)
Storage temperature	-25℃-65℃（Avoid ice or dew）
Resolution	1℃，0.1℃（adjustable）
Wiring method	terminals
accuracy	±0.5%FS
Memory protection	Non-volatile memory
installation environment	Installation type II, pollution grade 2（IEC61010-1）
relay output	relay contacts AC220V/DC30V，3A
logic level output	ON:DC12V; OFF: below DC0.5V; Max current: 30mA; Load resistance≥1K.

A4 Model selection

Model selection

A8 – □□□□□□
① ② ③ ④ ⑤ ⑥

① Panel size
1 : 48*48 4 : 48*96 7 : 72*72 9 : 96*96

② Main output
R : relay Q : logic level
C : analog output K : SCR phase shift / zero cross output

③ Alarm output
0: no alarm 1: 1 relay alarm output 2: 2 relay alarm outputs
3 : 1 logic level alarm output 4:2 logic level alarm output

④ Input signal
TC: K, E, J, N, WE-25, W5-26 PC: PT100
MT: K, E, J, N, WE-25, W5-26, PT100

⑤ Power supply
L:Linear power supply
S:Switch power supply

⑥ Strengthened funciton
0: No strengthened funcion 1: RS485 communication 2: 24VDC output

A5 Outer dimension and install hole size

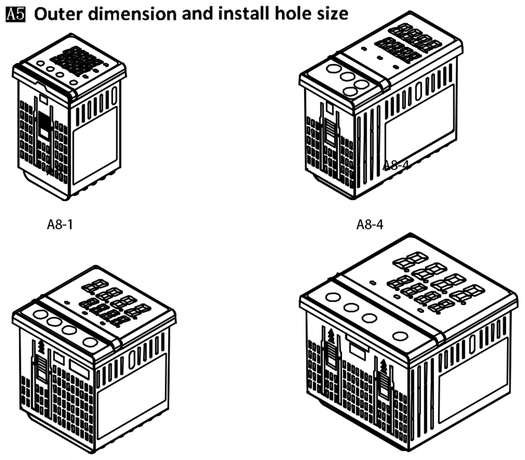

Unit：mm

Model	Panel size	case size L×W×H	install hole size
A8-1	48×48	76×45×45	46×46
A8-4	48×96	72×44×90	45×91
A8-7	72×72	72×66×66	67×67
A8-9	96×96	72×90×90	91×91

Wiring

A6

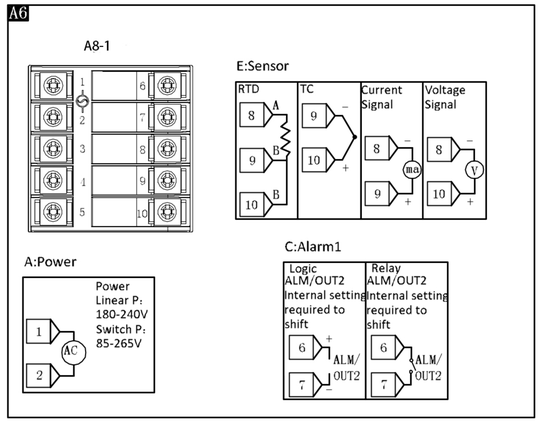

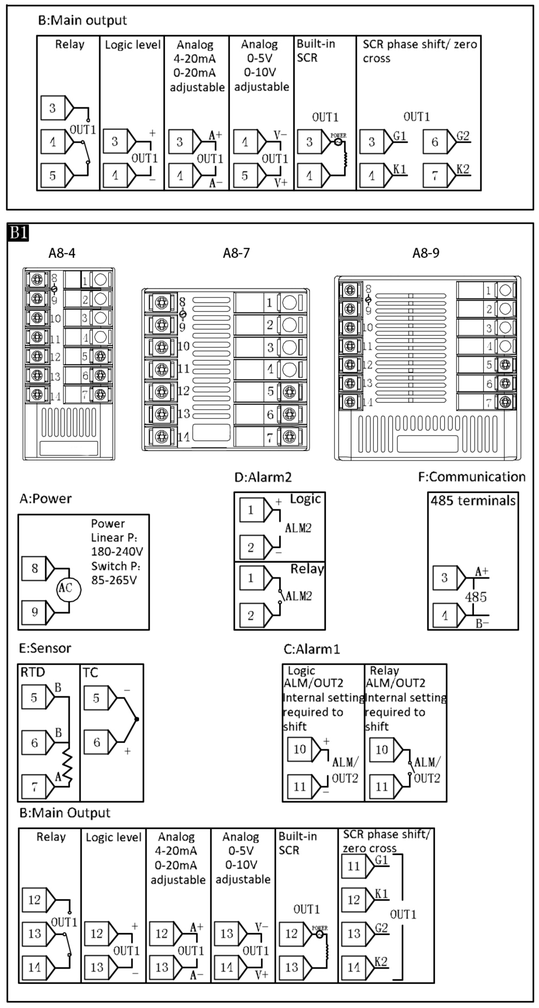

B2 Operation panel explanation

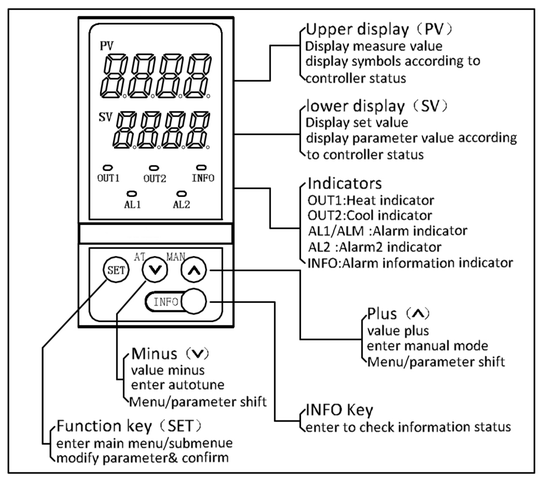

B3 Menu display explanation

Code	Menu Function	Default	Upper limit	Lower limit	Authority	Explanation
P00	data lock	0	900	0	0	0:0class authority 1:1class authority 18:2class authority 110:default to factroy setting
P17	High point of analog input	2000	9999	1999	2	Maximum acquisition range in the range of sensor acquisition
P12	resolution	0	1	0	1	P12=0: No decimal point P12=1decimal poin available
P13	temperature compensation	0	P32 value	P33 value	1	To modify temperature affected by sensor position or other problem
P16	input sensor	valid type	11	0	1	please refer to《C2 Sesor selection》
P17	Alm1 mode	1	21	0	1	Alarm1 type please refer to《B4 ALM alarm type define》
P18	upper limit of ALM1	10	P32 value	P33 value	1	
P19	Lower limit of ALM1	0	P32 value	P33 value	1	
P20	Alm1 parameter	0	7	0	1	
P22	Alm2 mode	0	21	0	2	The setting of ALM2 is the same as ALM1, please refer to《B4 ALM alarm type define》
P23	upper limit of ALM2	0	P32 value	P33 value	2	
P24	Lower limit of ALM2	0	P32 value	P33 value	2	
P25	ALM2 Parameter	0	7	0	2	
P28	manaul output value	0	100	-100	0	manaul output value
P30	error output value	0	100	-100	2	error output value
P31	℃/℉ shift	0	1	0	2	P31=0 : ℃ P31=1 : ℉
P32	Upper limit of set temperature	temperature range for sensor			2	Max temperature settable
P33	Lower limit of set temperature	temperature range for sensor			2	Min temperature settable
P36	Run time of motor	0.0	500.0	0.0	2	Run time of motor
P38	Baud rate	3	7	0	2	Communication baud rate
P39	Communication station No	10	252	1	2	Communication station No
P40	Brightness	4	7	0	2	only available with AK6-A series
P41	analog output mode	0	3	0	2	please refer to《C6 analog mode define》
P42	analog output type	0	3	0	2	
P43	upper limit of temperature tranmitting	0	P32 value	P33 value	2	
P44	lower limit of temperature tranmitting	0	P32 value	P33 value	2	
P45	Communication verification	2	2	0	2	0=nothing 1=Odd 2=even
P46	choose SV operating mode	0	1	0	2	check more detail in Part C7
P48	Low point of analog input	100	9999	1999		Minimum acquisition range in the range of sensor acquisition
P50	Startup mode of no feedback valve	0	1	0	3	0=OFF 1=ON
P53	Power On AT	0	1	0	2	Power on and AT start
P67	PID control mode	0	4	0	1	Please refer to《C3 PID control mode selection》
P69	Dead zone vaule	0	Max	Min	2	Dead zone vaule
P70	Heat return difference	0.5	999.9	0	1	when P67=2, it is ON/OFF control, modify P70 to set heat return difference
P72	Auto tune AT	0	2	0	0	Automatically calculate most suitable PID parameter for customer's system.
P73	Overshoot suppression factor	0	20	0	2	Overshoot suppression factor
P74	Control intensity factor	1	3	0	2	Control intensity factor
P75	object model OBJ	0	5	0	2	object model
P76	Heat parameter P	10.0	Max	0.1	1	proportional band of heat
P77	Heat parameter I	240	Max	1	1	Integral time of heat (time for the next adjustment).
P78	Heat parameter D	60	Max	1	1	Derivative time of heat (time for advance adjustment)
P79	advance control value	5.0	10.0	0.1	2	start control in advance unit:degree
P80	heat cycle HT	20	100	1	1	Relay：20 Logic level：3
P81	Cool cycel CT	20	100	1	2	Relay：20 Logic level：3
P82	Cool parameter P	10.0	Max	0.1	2	proportional band of cool
P83	Cool parameter I	240	Max	1	2	Integral time of cool (time for the next adjustment)

Code	Menu Function	Default	Upper limit	Lower limit	Authority	Explanation
P84	Cool parameter D	60	Max	1	2	Derivative time of cool (time for advance adjustment)
P85	cool power rate	100	Max	0	2	power rate of cool and heat
P86	Proportional cool displacement	100	Max	0	2	Proportional cool displacement
P87	min stop time	0	300	0	2	min stop time
P88	min start time	0	300	0	2	min start time
P89	Max output value	100	100	0	2	Max output value
P90	Min output value	-100	0	-100	2	Min output value
P91	Output variation	100	100	0	2	Output variation

Modbus						
	Baud rate P38	Code	0	1	2	3
		Define	1200	2400	4800	9600
		Code	4	5	6	7
		Define	19200	38400	57600	115200
	1、PV communication address：P10					
	2、SV communication address：P11					
	3、Code P** is both parameter code and corresponding communication address, which is decimal address					
	4、Support MODBUS-RTU communication protocol, 8 bit data format, 1 bit stop bit, even check					

Alarm

C1 ALM Alarm mode define - P17/P22

P17/P22 Code	Alarm Name	Alarm output condition
0	No alarm	No alarm output
1	Deviation upper limit	when PV>SV+P18
2	Deviation lower limit	when PV<SV-P19
3	Deviation upper & lower limit	when PV>SV+P18 or PV<SV-P19
4	Deviation upper & lower limit range	when PV<SV+P18 and PV>SV-P19
5	Deviation upper limit(keeping)	when PV>SV+P18
6	Deviation lower limit(keeping)	when PV<SV-P19
7	Deviation upper & lower limit(keeping)	when PV>SV+P18 or PV<SV-P19
8	Deviation upper & lower limit range(keeping)	when PV<SV+P18 and PV>SV-P19
9	absolute value upper limit	when PV> P18
10	absolute value lower limit	when PV<P19
11	absolute value upper & lower limit	when PV>P18 or PV<P19
12	absolute value upper & lower limit range	when PV<P18 and PV>P19
13	absolute value upper limit(keeping)	when PV> P18
14	absolute value lower limit(keeping)	when PV<P19
15	absolute value upper & lower limit(keeping)	when PV>P18 or PV<P19
16	absolute value upper & lower limit Range (keeping)	when PV<P18 and PV>P19
17	Upper limit with return difference	when PV>SV+P18 alarm on, till PV<SV-P19 alarm off
18	lower limit with return difference	when PV<SV-P19 alarm on，till PV>SV+P18alarm off
19	absolute value upper limit with return difference	when PV> P18 alarm on, till PV< P19 alarm off
20	absolute value lower limit with return difference	when PV< P19alarm on, till PV> P18 alarm off
21	Upper limit with return difference (keeping)	when PV>SV+P18alarm on,till PV<SV-P19alarm off
22	lower limit with return difference (keeping)	when PV<SV-P19 alarm on,till PV>SV+P18alarm off
23	absolute value upper limit with return difference (keeping)	when PV> P18alarm on，till PV< P19alarm off
24	absolute value lower limit with return difference (keeping)	when PV< P19 alarm on，till PV> P18 alarm off

ALARM KEEPING definition: after powering on the controller, PV should go out of the alarm range first, and when it goes back to the alarm range again, the alarm output would only be ON for the first time.

C2 ALM alarm parameter define - P20/P25

P20/P25 Code	Parameter define	Explanation
0	None	no action
1	Alarm1 output（ALM1）	alarm output is set to ALM1
2	alarm 2 output（ALM2）	alarm output is set to ALM2
3	heat output	Shift heat output. details please refer to《D Operation instruction》
4	cool output	cool output point of Two-way PID
5	Manual symbol	action symbol of manual output
6	Information symbol	settable output point when F.01≠0 in info menu, details please refer to《C4 status information explanation》
7	Error symbol	settable output point when error happens, details please refer to《C5 Error display explanation》
8	Reverse alarm output	If you choose this code, you will get reverse alarm output action.

Remark: when set this parameter, corresponding P17 or P22 should be set to 0.

C3 Sensor input

	sensor input	sensor type	set code	temperature range
temperature input（P16）	TC	K	0	-200℃—1200℃
		E	1	-200℃—650℃
		J	2	-200℃—850℃
		S	3	-50℃—1700℃
		B	4	0℃—1800℃
		N	5	-200℃—1300℃
		R	6	-50℃—1700℃
		T	7	-200℃—400℃
		W3-25	10	0℃—2300℃
		W5-26	11	0℃—2300℃
	RTD	PT100	8	-200℃—850℃
		Cu50	9	-50℃—150℃

Remark: only the temperature controller with input signal T (universal input) support above parameters

	sensor input	sensor type	set code	analog range
analog input（P16）	Analog	Current Input	0	4-20mA
			1	0-20mA
		Voltage Input	2	0-5V
			3	0-10V
			4	1-5V

Remark: only the temperature controller with input signal A (analog input) support above parameters

C4 PID Control mode selection

P67 set value	0	1	2
mode	single PID	Two way PID (invalid with AK6 series)	ON/OFF Control

C5 Inforamtion status explanation

INFO Information status table

Parameter code	Code define	Parameter code	Code define
F.01	Info alarm code	F.91	Manufacture month
F.10	control output value	F.92	Manufacture day
F.11	cold end temperature (room temperature）	F.93	Software version
F.12	internal parameter	F.94	PID bank version
F.90	Manufacture year	F.95	User version

C6 Error display explanation

Error code table

display	code define	trouble shooting	Remark
Err0	No Error	None	Upper display (PV）blinks
Err1	parameter invalid	Controller malfunction, please contact supplier for service.	
Err2	RTD disconnected	Please check if RTD is disconnected.	
Err3	abnormal cold end temperature	Controller malfunction, please contact supplier for service.	
Err4	exceed upper limit of temperature range	Please check if thermocouple is disconnected.	
Err5	exceed lower limit of temperature range	Please check if thermocouple is disconnected.	
Err6	Reverse ther mocouple wire	Please check if thermocouple is reverse wired	

C7 Choose SV operating mode

Code	Parameter Value	Explanation	Authority
P46	0	When temperature setting: First press SET once, then press + or - to adjust value and press SET once to save changes	2class
	1	When temperature setting: Press + or - to adjust value and Auto-confirm after the adjustment stop	

D1 Analog type define

Code	Parameter function	settable value	explanation	authority
P41	analog output mode	0 = analog output mode: 4-20MA 1 = analog output mode: 0-20MA 2 = analog output mode: 0-5V 3 = analog output mode: 0-10V 4=analog output mode: 1-5V 5=analog output mode: 0-10MA default: 0	shiftable	2class
	phase shift output	0=phase shift output 1=zero cross output		
P42	analog output setting	0 = heat output value 1 = cool output value 2 = temperature transmitting output 3 = reversed heat output 4=soft start output default: 0	0：analog output for heat control 1：Two-way PID mode, invalid for AK6 2：Analog output for temperature transmitting output 3：analog output reversed heat value for cooling 4: A. Below 100°C, restricted output, 25% output state. Heat up from 100°C to 120°C, output linear increase from 25% to 100%. B. In the first 5min, 25% output state. From 5min to 8min, output linear increase from 25% to 100%.	2class
P43	upper limit of temperature transmitting	temperature value for max analog	only valid in temperature transmitting mode	2class
P44	lower limit of temperature transmitting	temperature value for min analog	only valid in temperature transmitting mode	2class

D2 Other information

1、Two-way PID control

* lower power comsumption, higher control accuracy
* PID control for both heating and cooling
* Avoid temperature fluctuation caused by ON/OFF cooling
* Cooling type changes into PID intelligent control from ON-OFF return difference control. This is huge progress like old analog controller changes into intelligent controller.

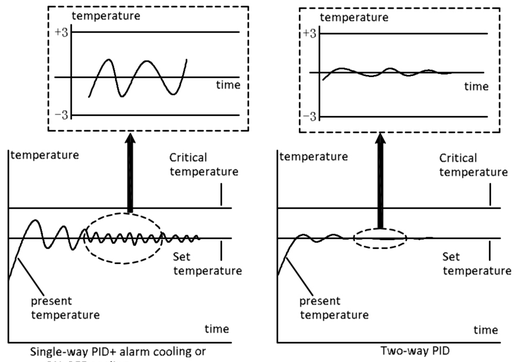

Single-way PID+ alarm cooling or ON-OFF cooling

Two-way PID

2、Comparison on anti-interference performance

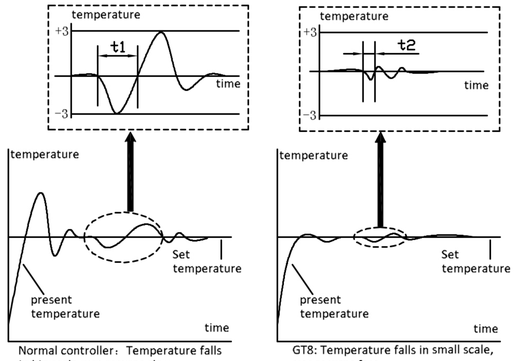

Normal controller：Temperature falls in big scale, yet returns slow.

GT8: Temperature falls in small scale, yet returns fast.

3、Conparison on start overshooting

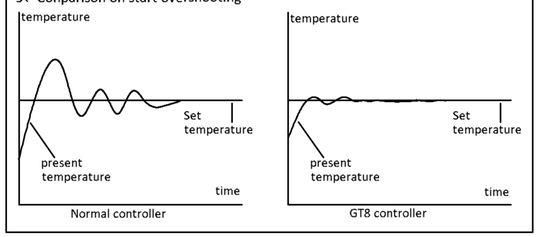

D3 Operation instruction

- Temperature setting

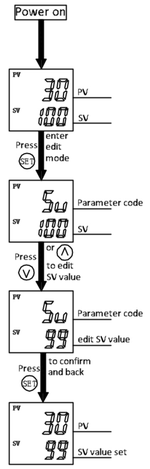

- Autotune(AT) operation

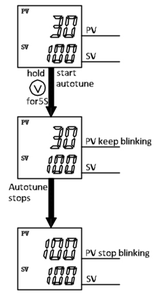

- System parameter setting

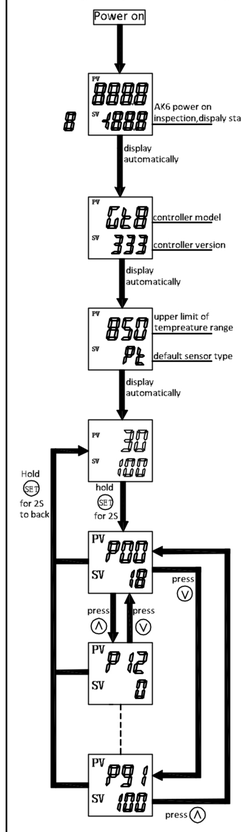

system menu is different according to P00 value(data lock), details refer to《B3 menu display explanation》

- Case：Shift sensor type

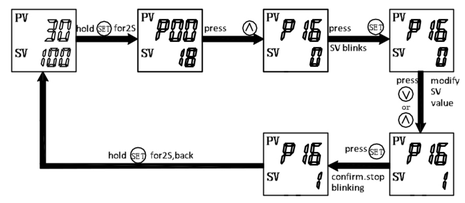

Remark：P16:input sensor selection please refer to《C3 input sensor selection》